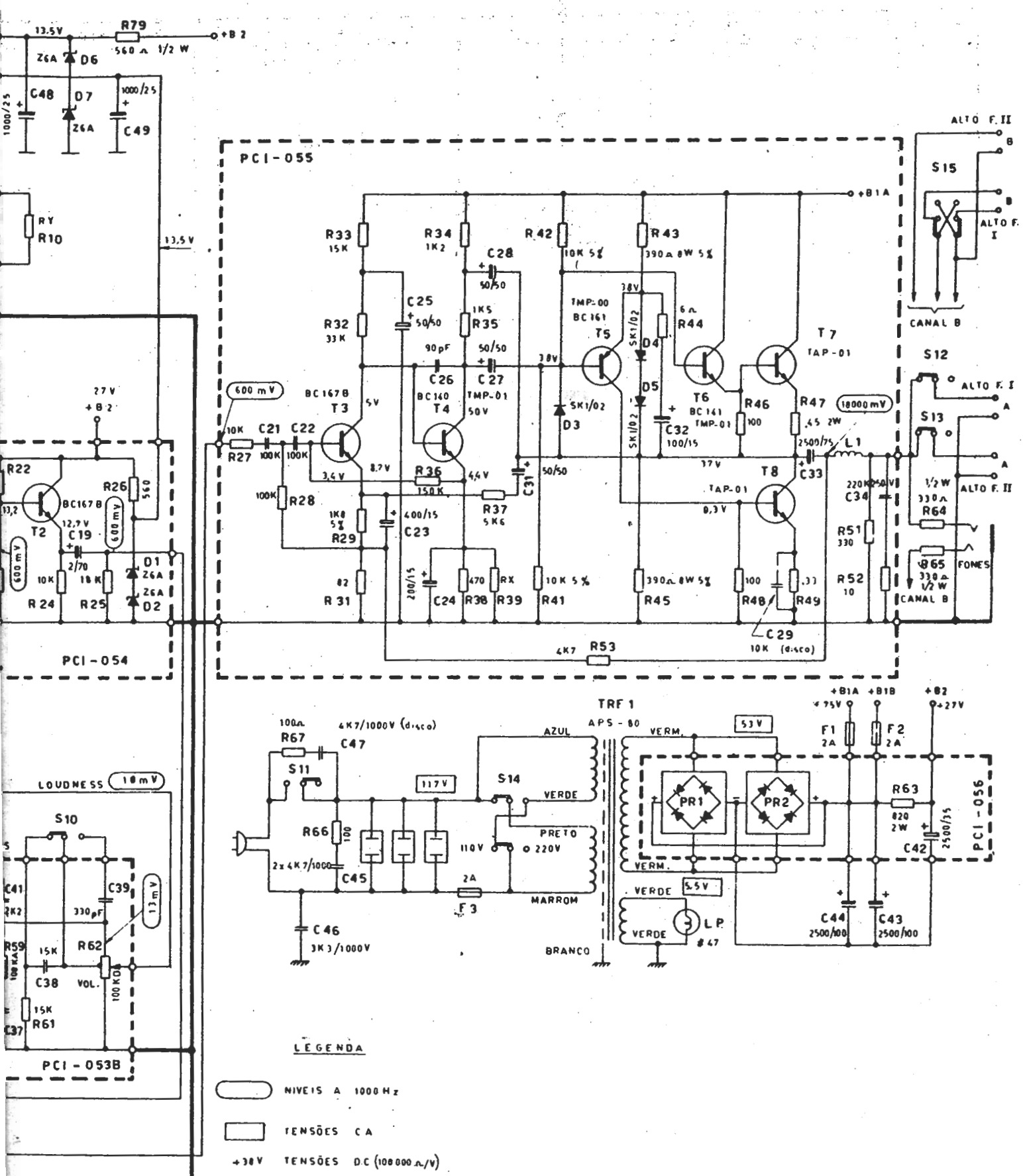

gigi.gomes@uol.com.br

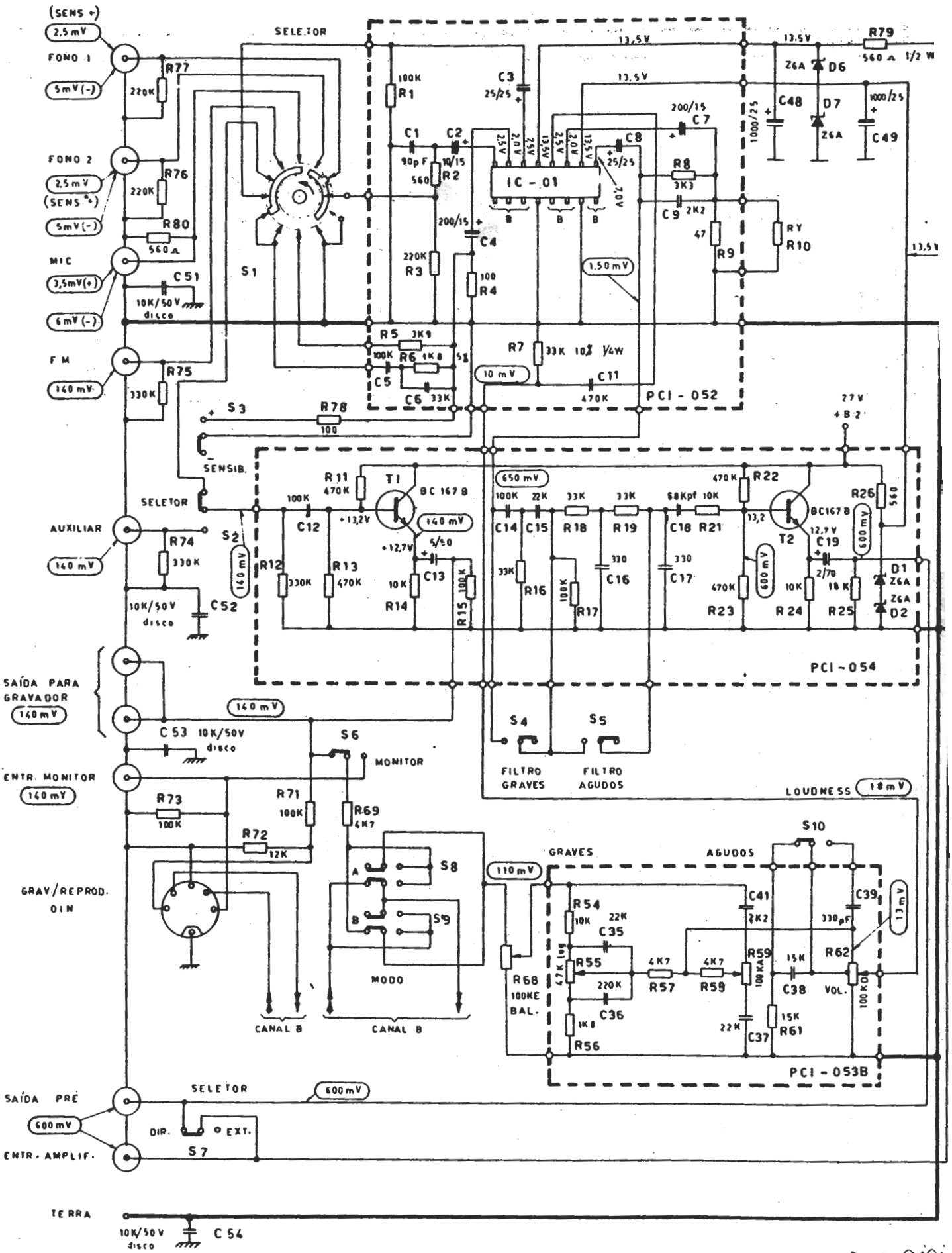
(SENS +)
2,5 mV
FONO 1
5mV(-)
FONO 2
2,5 mV
(SENS +)
5mV(-)
MIC
3,5mV(+)
6mV(-)
FM
140 mV
AUXILIAR
140 mV
SAÍDA PARA GRAVADOR
140 mV
ENTR. MONITOR
140 mV
GRAV/REPROD. DIN
SAÍDA PRÉ
600 mV
ENTR. AMPLIF.
TERRA
SELETOR
S1
R77 220K
R76 220K
R80 560Ω
C51 10K/50V disco
R75 330K
S3
R78 100
SENSIB.
S2
R74 330K
C52 10K/50V disco
C53 10K/50V disco
S6
MONITOR
R73 100K
R71 100K
R69 4K7
R72 12K
S8
S9
MODO
CANAL B
CANAL B
R1 100K
C1 90pF
C2 10/15
R2 560
C3 25/25
C4 200/15
R3 220K
R4 100
R5 3K9
R6 1K8
C5 100K
C6 33K
R7 33K 10% 1/4W
C11 470K
C7 200/15
C8 25/25
R8 3K3
C9 2K2
R9 47
R10 RY
IC - 01
1,50 mV
10 mV
PCI - 052
13,5V
R79 560Ω 1/2 W
Z6A D6
D7 Z6A
C48 1000/25
C49 1000/25
27 V
+B2
R11 470K
T1 BC 167 B
C12 100K
R12 330K
R13 470K
R14 10K
C13 5/50
R15 100K
140 mV
650 mV
C14 100K
C15 22K
R16 33K
R18 33K
R17 100K
R19 33K
C16 330
C17 330
C18 68Kpf
R21 10K
R22 470K
R23 470K
T2 BC167 B
R24 10K
C19 2/70
R25 10K
R26 560
600 mV
D1 Z6A
D2 Z6A
PCI - 054
S4
S5
FILTRO GRAVES
FILTRO AGUDOS
LOUDNESS 18 mV
S10
GRAVES
AGUDOS
110 mV
R54 10K
C35 22K
R55 47K log
C36 220K
R56 1K8
R57 4K7
R58 4K7
R59 100KA
C41 2K2
C37 22K
R61 15K
C38 15K
C39 330pF
R62 100KB
VOL.
13 mV
R68 100KE BAL.
PCI - 053B
600 mV
DIR.
EXT.
S7
C54 10K/50V disco